Ra 12,5 (√)

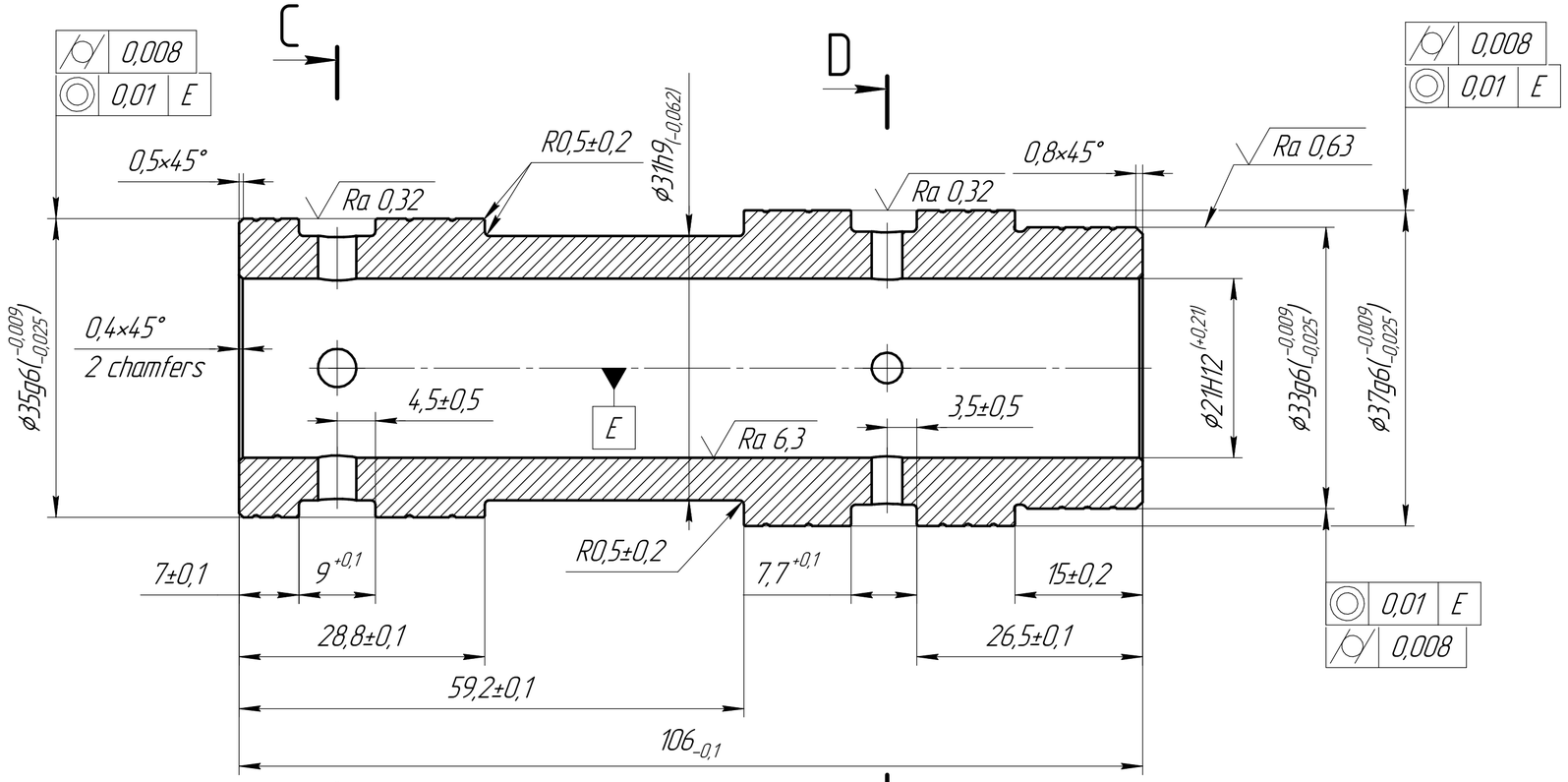

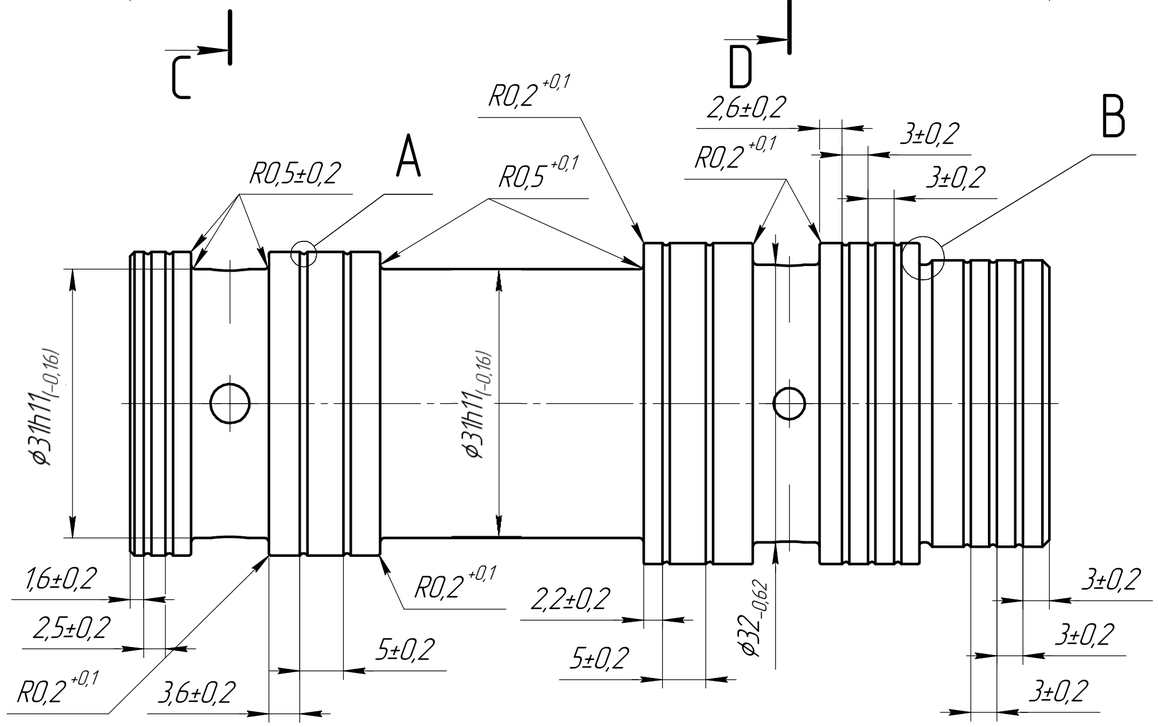

C–C

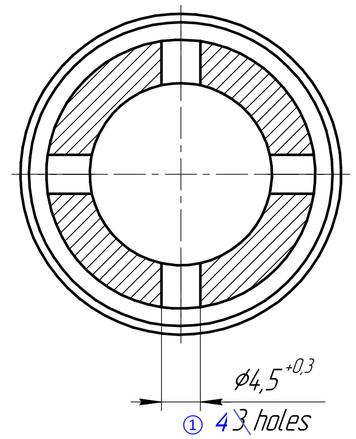

D–D

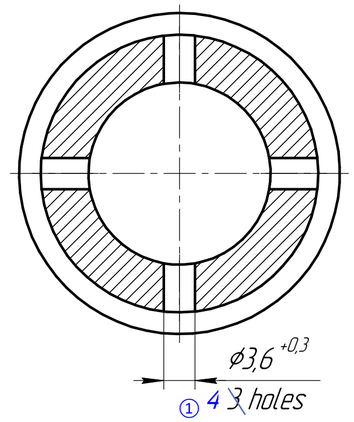

A(4:1)

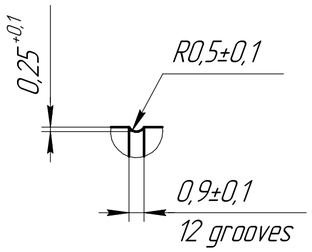

B(4:1)

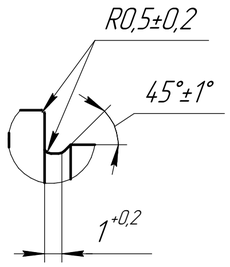

1 48...52 HRC

2 It is allowed to manufacture from 40X GOST 4543-71

Допускается изготовление из 40Х ГОСТ 4543-71

3 Mark the designation on the tag

Маркировать обозначение на бирке

UNLESS OTHERWISE SPECIFIED: DIMENSIONS ARE IN MILLIMETERS				DEBUR AND BREAK SHARP EDGES	DO NOT SCALE DRAWING REVISION /
SURFACE FINISH: TOLERANCES: LINEAR: ANGULAR:		FINISH:			DHM GROUP
	NAME	SIGNATURE	DATE		
DRAWN	Shirnin		2025.06.16		TITLE: Control valve
CHK'D	Kuznetsov				Золотник
APPV'D	Movchan				
MFG	Zasuha				
Q.A	Bill		03.07.25 08:36	MATERIAL: 40ХН ГОСТ 4543-71	DWG.NO 0450.10 30 10.004 A2
				WEIGHT: 0,44	SCALE: 2:1 SHEET 1